▶ 55t状态行驶尺寸图，最小轮胎转弯半径12000mm。
QY160K Truck crane outline in travel configuration with 55t counterweight equipped, Min. turning radius of tire is 12000mm.

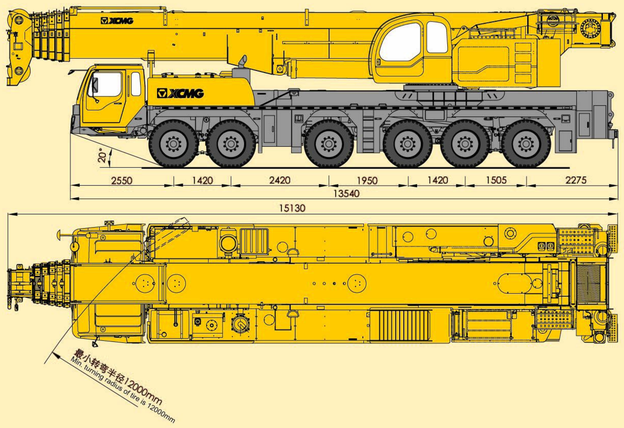

▶ 62t状态行驶尺寸图，最小轮胎转弯半径12000mm。
QY160K Truck crane outline in travel configuration with 62t counterweight equipped, Min. turning radius of tire is 12000mm.

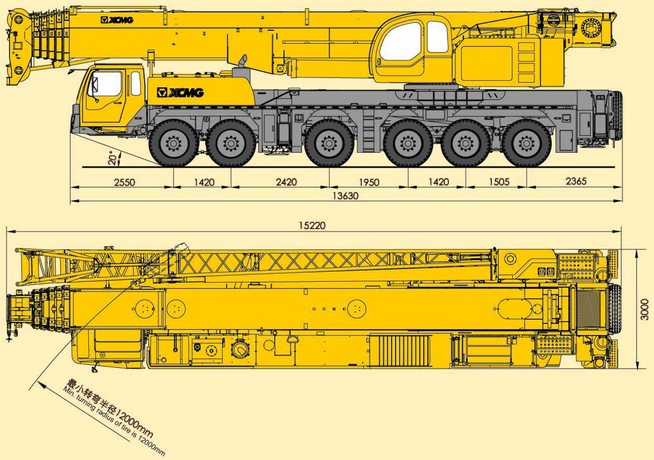

▶ 工作区域图
Crane working areas diagram

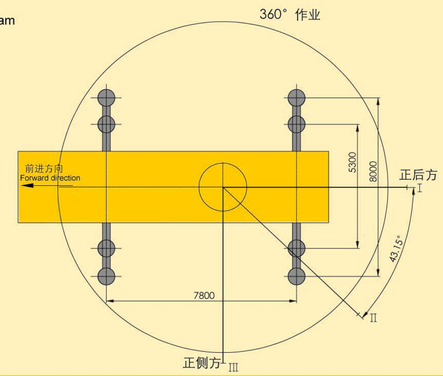

技术参数
Technical Specification

起重机行驶状态主要技术参数表 Main Technical Data in Travel State

行驶状态整机质量	Dead weight in travel state	54900kg
一轴轴荷	1st axle load	7500kg
二轴轴荷	2st axle load	7500kg
三轴轴荷	3st axle load	8300kg
四轴轴荷	4st axle load	12000kg
五轴轴荷	5st axle load	12000kg
六轴轴荷	6st axle load	7600kg
最高行驶速度	Max.travel speed	80km/h
最小转弯直径	Min.truning diameter	24m
最大爬坡能力	Max.grade ability	40%
百公里油耗	Fuel consumption of 100km	75L
上车发动机型号	Superstructure engine	TAD720VE
下车发动机型号	Carrier engine	OM460LA
上车发动机额定功率	Superstructure engine rated output	162/2100kW/(r/min)
下车发动机额定功率	Carrier engine rated output	360/1800KW/(r/min)
上车发动机额定扭矩	Superstructure engine rated torque	850/1500N.m/(r/min)
下车发动机额定扭矩	Carrier engine rated torque	2200/1300N.m/(r/min)

起重机作业状态主要技术参数表 Main Technical Data For Lifting Operation

最大额定总起重量	Max.total ratedlifting capacity	160t
最小额定工作幅度	Min.rated working radius	3m
转台尾部回转半径(平衡重)	Turning radius at swing table tail	4890mm
基本臂最大起重力矩	Parameters Max.load	5252.8kN.m
最长主臂最大起重力矩	Full-extend boom Max.load	2371.6kN.m
纵向支腿距离	Longitudinal distance Outrigger span	7.8m
横向支腿距离	Lateral distance Outrigger span	8.0(5.3)m
基本臂起升高度	Parameters Lifting height	13.2m
最长主臂起升高度	Full-extend boom Lifting height	61.4m
最长主臂+副臂 起升高度	Full-extend boom+Jib Lifting height	88.6m
基本臂 起重臂长度	Parameters Boom length	13.2m
最长主臂 起重臂长度	Full-extend boom Boom length	62m
最长主臂+副臂起重臂长度	Full-extend boom+Jib Boom length	90m(带加长节)
副臂安装角	Jib offset	0°、15°、30°
起重臂变幅时间	Boom elevating time	80s
起重臂伸缩时间	Boom telescoping time	500s
最大回转速度	Max.swing speed	1.3r/min

工作范围图

Diagram For Working Range

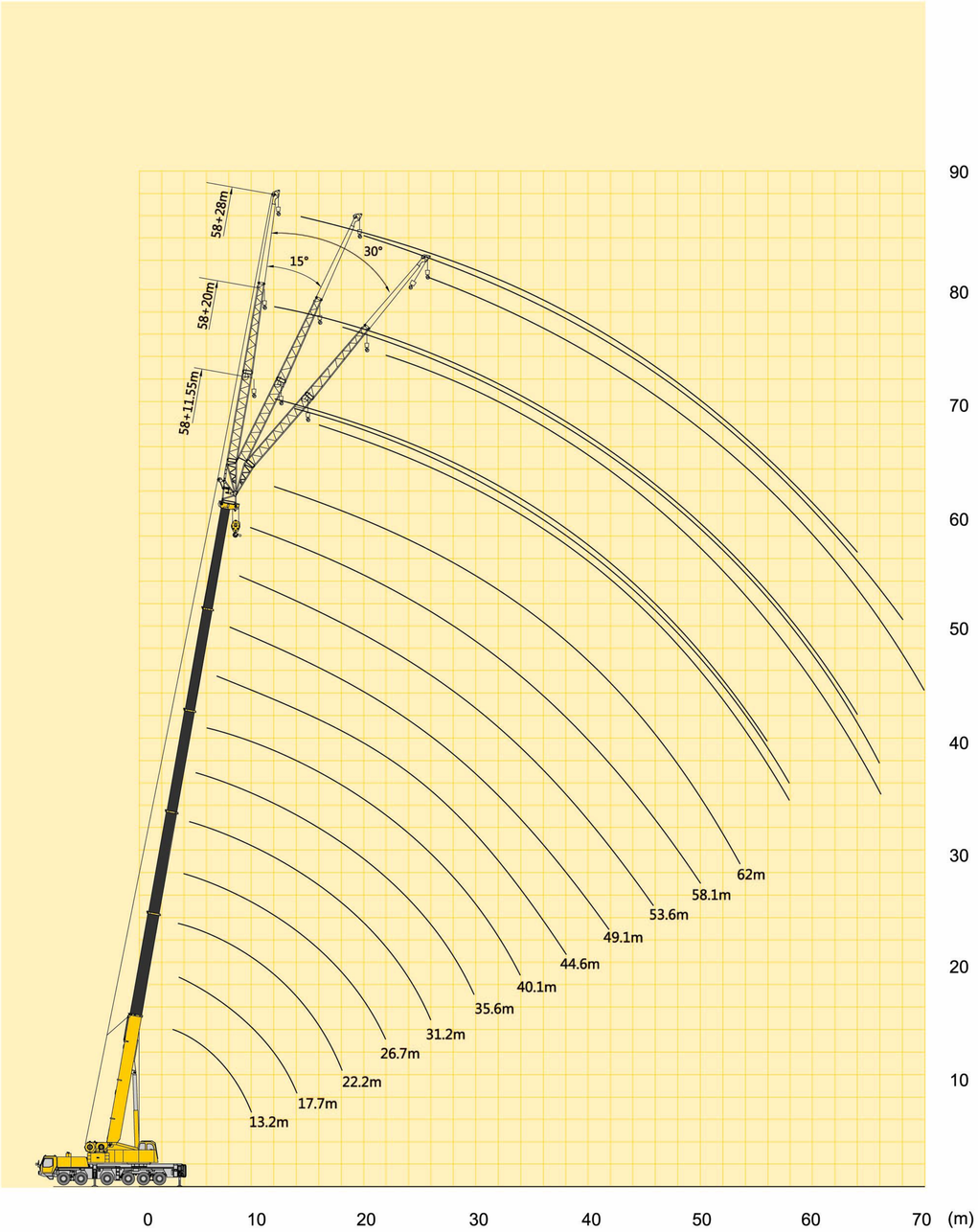

主臂 平衡重50t

Boom Counterweight 50t

主臂额定起重量（全伸支腿8m，平衡重50t）

13.2-62m | 全伸支腿 | 360° | 50t

主臂/Boom (m)

	13.2	17.7	17.7	22.2	22.2	22.2	26.7	26.7	26.7	31.2	31.2	31.2	35.7	35.7	
3.0	160.0														3.0
3.5	130.0	111.0	50.5												3.5
4.0	120.0	111.0	48.6	103.0	102.5	44.3									4.0
4.5	110.0	104.0	44.0	100.0	100.0	37.5	87.0	82.7	39.8						4.5
5.0	104.0	100.0	42.4	97.0	96.0	35.3	86.0	81.5	39.5	68.0	67.5	32.4			5.0
6.0	89.0	88.0	41.0	85.0	85.0	32.3	82.0	77.0	37.6	63.0	62.0	32.4	53.0	51.5	6.0
7.0	76.0	76.0	36.5	76.0	76.0	29.3	71.0	67.2	33.6	57.0	57.0	32.4	50.0	48.6	7.0
8.0	67.0	67.0	35.2	66.0	65.7	26.3	63.0	60.0	30.4	53.0	53.0	25.2	47.0	45.8	8.0
9.0	58.0	58.0	31.6	58.0	57.0	23.4	56.0	55.2	28.0	48.0	45.9	23.6	44.0	42.9	9.0
10.0	53.0	53.0	29.5	53.0	52.7	21.7	51.0	41.6	21.5	44.0	42.9	22.1	41.0	40.4	10.0
12.0		42.0	26.9	42.0	42.0	18.9	42.0	32.9	17.1	38.0	35.5	18.0	35.0	34.3	12.0
14.0		33.0	24.4	35.0	35.0	18.0	36.0	32.0	16.9	33.0	30.1	15.3	30.0	30.0	14.0
16.0				28.0	28.0	13.2	29.0	26.4	13.8	28.0	26.8	13.3	27.0	25.5	16.0
18.0				23.0	23.0	12.3	24.0	22.0	12.7	23.0	21.6	11.7	24.0	23.7	18.0
20.0							20.0	18.3	12.5	19.0	18.2	9.6	20.0	20.0	20.0
22.0							17.0	17.0	12.0	16.0	15.1	8.3	17.0	17.0	22.0
24.0										14.0	13.4	6.9	15.0	14.1	24.0
26.0										12.0	12.0	6.2	13.0	12.2	26.0
28.0													11.0	10.5	28.0
30.0													10.0	9.3	30.0
组合	00000	01000	00001	11000	02000	00002	11100	21000	00012	11110	21100	00022	11111	21110	组合
倍率	16、14	10	5	9	9	4	8	8	4	7	6	4	6	6	倍率

	35.7	40.1	40.1	40.1	44.6	44.6	44.6	49.1	49.1	49.1	53.6	53.6	58.1	62.0	
6.0	33.3														6.0
7.0	30.6	45.7	45.0	31.6											7.0
8.0	28.9	42.0	42.0	29.6	36.8	35.3	29.1								8.0
9.0	27.9	38.9	38.9	27.4	34.7	33.4	27.4	29.9	25.0	24.2					9.0
10.0	27.3	36.8	36.8	25.9	32.6	31.5	25.3	28.4	23.8	22.8	24.2	21.8			10.0
12.0	21.3	31.5	31.5	22.2	28.4	28.4	22.6	25.2	22.4	21.4	22.1	20.3	18.9	15.5	12.0
14.0	18.0	28.4	28.4	20.4	25.2	25.2	20.2	23.1	20.0	16.0	21.0	18.8	17.9	14.6	14.0
16.0	16.4	25.2	25.2	18.4	22.5	22.5	18.3	21.0	17.9	15.6	18.9	17.6	16.6	13.9	16.0
18.0	15.0	22.6	22.6	16.4	20.2	20.2	16.7	18.9	17.1	14.6	16.8	16.5	15.2	13.0	18.0
20.0	14.1	20.0	20.0	14.6	18.5	18.5	15.3	17.1	16.3	15.3	15.2	15.2	14.0	12.1	20.0
22.0	11.2	17.9	17.9	13.5	16.8	16.8	13.9	15.5	15.2	12.5	14.2	14.0	12.8	11.0	22.0
24.0	9.8	15.8	15.8	12.2	15.2	15.2	12.9	14.2	14.1	12.4	13.1	12.9	11.9	10.0	24.0
26.0	8.5	13.7	13.7	10.6	13.7	13.7	12.0	13.0	13.0	12.2	12.1	11.9	11.0	8.9	26.0
28.0	7.5	11.9	11.9	9.2	12.1	12.1	10.7	12.1	12.1	10.7	11.1	11.1	10.3	8.4	28.0
30.0	6.5	10.4	10.4	8.6	10.5	10.5	9.3	10.7	10.7	9.2	10.3	10.3	9.7	7.9	30.0
32.0		9.1	9.1	7.8	9.2	9.2	8.5	9.5	9.5	7.9	9.6	9.5	9.1	7.4	32.0
34.0		8.0	8.0	7.0	8.1	8.1	7.9	8.4	8.4	7.9	8.7	8.7	8.5	6.9	34.0
36.0					7.1	7.1	6.8	7.5	7.5	7.1	7.9	7.7	8.0	6.5	36.0
38.0					6.3	6.3	6.0	6.6	6.6	5.9	7.0	6.8	7.4	6.1	38.0
40.0								5.8	5.8	5.0	6.2	6.0	6.6	5.7	40.0
42.0											5.6	5.4	6.0	5.3	42.0
44.0											4.9	4.9	5.5	4.8	44.0
46.0													4.9	4.5	46.0
48.0													4.4	4.1	48.0
50.0														3.8	50.0
52.0														3.5	52.0
组合	00122	21111	11112	00222	22111	11122	01222	22211	11222	02222	22221	12222	22222	33333	组合
倍率	4	4	4	3	4	4	3	3	3	3	3	2	2	2	倍率

主臂额定起重量（全伸支腿8m，平衡重0t）

13.2-62m | 全伸支腿 | 360° | 0t

主臂/Boom (m)

	13.2	17.7	17.7	22.2	22.2	22.2	26.7	26.7	26.7	31.2	31.2	31.2	35.7	35.7	
3.0	135.0														3.0
3.5	124.0	111.0	50.5												3.5
4.0	112.0	111.0	48.6	98.0	97.0	44.2									4.0
4.5	100.0	96.0	44.0	89.3	89.3	37.5	85.5	82.7	39.8						4.5
5.0	90.3	84.6	42.4	80.8	80.8	35.3	75.0	73.0	39.5	68.0	59.0	32.4			5.0
6.0	70.2	66.6	41.0	63.9	63.9	32.3	62.1	60.3	37.6	60.3	58.5	32.4	53.0	49.4	6.0
7.0	49.0	47.9	36.5	46.8	47.5	29.3	48.0	45.5	33.6	48.5	46.6	32.4	47.6	45.1	7.0
8.0	34.0	33.2	35.2	32.3	32.9	26.3	33.3	31.3	30.4	34.1	32.2	25.2	34.4	32.5	8.0
9.0	25.3	24.7	27.2	24.0	24.5	23.4	24.9	23.1	28.0	25.5	24.0	23.6	26.2	24.5	9.0
10.0	19.7	19.2	21.5	18.6	19.0	21.7	19.4	17.8	21.5	20.0	18.6	22.1	20.8	19.3	10.0
12.0		12.5	14.5	11.9	12.3	15.5	12.7	11.3	16.4	13.3	12.0	16.4	14.2	12.8	12.0
14.0		8.5	10.3	8.0	8.4	11.3	8.7	7.4	12.1	9.3	8.1	12.2	10.2	8.9	14.0
16.0				5.4	5.8	8.5	6.1	4.9	9.3	6.6	5.5	9.4	7.7	6.3	16.0
18.0				3.6	3.9	6.6	4.3	3.1	7.3	4.8	3.7	7.4	5.8	4.4	18.0
20.0							2.8	1.4	5.9	3.4	2.1	6.0	4.4	2.9	20.0
22.0							1.5		4.7	2.3	1.3	4.8	3.3	1.7	22.0
24.0										1.5		3.9	2.2	1.1	24.0
26.0												3.2	1.7		26.0
28.0													1.1		28.0
组合	00000	01000	00001	11000	02000	00002	11100	21000	00012	11110	21100	00022	11111	21110	组合
倍率	12	10	5	9	9	4	8	8	4	6	6	3	5	5	倍率

	35.7	40.1	40.1	40.1	44.6	44.6	44.6	49.1	49.1	49.1	53.6	53.6	58.1	62.0	
6.0	33.3														6.0
7.0	30.6	43.3	38.3	26.6											7.0
8.0	27.3	33.5	35.2	24.5	32.8	28.7	24.6								8.0
9.0	25.2	25.5	27.0	23.0	25.3	26.8	22.8	26.0	21.2	20.7					9.0
10.0	22.5	20.2	21.5	21.4	20.0	21.5	21.5	20.5	19.5	19.2	20.9	18.4			10.0
12.0	15.8	13.6	14.8	15.7	13.5	14.8	15.7	13.8	15.0	15.3	14.1	15.1	14.6	14.5	12.0
14.0	12.1	9.7	10.8	11.7	9.6	10.8	11.6	9.8	11.3	11.5	10.1	11.1	10.5	10.5	14.0
16.0	9.5	7.0	8.3	8.9	7.0	8.4	9.2	7.2	8.6	8.8	7.5	8.4	7.9	7.9	16.0
18.0	7.6	5.2	6.4	7.0	5.1	6.7	7.2	5.3	6.7	6.9	5.6	6.5	6.0	6.0	18.0
20.0	6.1	3.8	5.0	5.5	3.8	5.2	5.8	3.9	5.3	5.4	4.2	5.1	4.6	4.6	20.0
22.0	5.0	2.6	3.9	4.4	2.5	4.0	4.6	2.8	4.2	4.3	3.2	4.0	3.6	3.6	22.0
24.0	4.0	1.5	2.9	3.5	1.5	3.2	3.8	1.7	3.3	3.4	2.1	3.1	2.6	2.6	24.0
26.0	3.3	1.2	2.1	2.8	1.1	2.4	3.0	1.3	2.5	2.7	1.6	2.3	1.8	1.8	26.0
28.0	2.6		1.7	2.2		1.7	2.3		1.8	1.9	1.0	1.8	1.4	1.4	28.0
30.0	2.0		1.1	1.7		1.4	1.9		1.5	1.6		1.3			30.0
32.0				1.2			1.5		1.0	1.2					32.0
34.0							1.1								34.0
组合	00122	21111	11112	00222	22111	11122	01222	22211	11222	02222	22221	12222	22222	33333	组合
倍率	3	4	4	3	3	3	3	3	2	2	2	2	2	2	倍率

主臂额定起重量（半伸支腿5.3m，平衡重40t）

13.2-62m | 半伸支腿 | 360° | 40t

主臂/Boom (m)

	13.2	17.7	17.7	22.2	22.2	22.2	26.7	26.7	26.7	31.2	31.2	31.2	35.7	35.7	
3.0	128.0														3.0
3.5	117.0	111.0	50.5												3.5
4.0	108.0	103.0	48.6	99.0	99.0	44.3									4.0
4.5	100.0	96.0	44.0	92.0	92.0	37.5	87.0	82.7	39.8						4.5
5.0	93.0	89.0	42.4	86.0	86.0	35.3	83.0	81.5	39.5	68.0	66.4	32.4			5.0
6.0	82.0	79.0	41.0	76.0	76.0	32.3	74.0	73.0	37.6	63.0	63.0	32.4	53.0	51.3	6.0
7.0	66.8	65.7	36.5	64.8	65.2	29.3	65.0	63.8	33.6	57.0	57.0	32.4	50.0	48.6	7.0
8.0	53.1	52.1	35.2	51.4	51.8	26.3	52.0	50.5	30.4	52.4	51.1	25.2	47.0	45.7	8.0
9.0	43.6	42.9	31.6	42.2	42.6	23.4	42.8	41.4	28.0	43.1	41.9	23.6	44.0	41.6	9.0
10.0	36.8	36.1	29.5	35.5	35.8	21.7	36.1	34.8	21.5	36.4	35.3	22.1	37.4	35.9	10.0
12.0		26.9	26.9	26.4	26.7	18.9	26.9	25.8	17.1	27.3	26.3	18.0	28.3	26.9	12.0
14.0		20.9	22.5	20.5	20.8	18.0	21.0	19.9	16.9	21.5	20.4	15.3	22.3	21.0	14.0
16.0				16.4	16.7	13.2	16.9	15.8	13.8	17.3	16.3	13.3	18.2	16.9	16.0
18.0				13.3	13.6	12.3	13.9	12.8	12.7	14.3	13.3	11.7	15.1	13.9	18.0
20.0							11.5	10.4	12.5	11.9	11.0	9.6	12.8	11.6	20.0
22.0							9.6	8.6	12.0	10.0	9.1	8.3	10.9	9.7	22.0
24.0										8.5	7.6	6.9	9.4	8.2	24.0
26.0										7.3	6.2	6.2	8.1	7.0	26.0
28.0													7.1	5.8	28.0
30.0													6.2	4.6	30.0
组合	00000	01000	00001	11000	02000	00002	11100	21000	00012	11110	21100	00022	11111	21110	组合
倍率	12	10	5	9	9	4	8	8	4	6	6	3	5	5	倍率

	35.7	40.1	40.1	40.1	44.6	44.6	44.6	49.1	49.1	49.1	53.6	53.6	58.1	62.0	
6.0	33.3														6.0
7.0	30.6	45.7	41.7	29.5											7.0
8.0	28.9	42.0	39.7	26.7	36.8	34.3	29.1								8.0
9.0	26.8	38.9	36.9	24.9	34.7	32.7	27.4	29.9	21.7	21.2					9.0
10.0	25.4	36.6	34.1	23.3	32.6	30.6	25.3	28.4	20.6	20.2	24.2	20.9			10.0
12.0	21.3	27.5	28.8	19.6	27.4	27.6	22.6	25.2	19.2	19.5	22.1	19.0	18.9	15.5	12.0
14.0	18.0	21.7	22.8	17.0	21.6	23.0	20.2	21.7	18.0	16.0	21.0	17.4	17.9	14.6	14.0
16.0	16.4	17.6	18.7	14.1	17.5	18.9	18.3	17.6	16.0	15.7	17.8	15.4	16.6	13.9	16.0
18.0	15.0	14.5	15.6	13.7	14.5	15.8	15.8	14.6	15.3	14.0	14.8	13.6	15.1	13.0	18.0
20.0	14.1	12.2	13.3	13.4	12.1	13.5	14.0	12.3	13.3	12.8	12.5	13.3	12.8	12.1	20.0
22.0	11.2	10.3	11.4	11.9	10.3	11.6	12.1	10.4	11.6	11.5	10.7	11.4	11.0	10.9	22.0
24.0	9.8	8.8	9.9	10.4	8.8	10.1	10.6	8.9	10.1	10.2	9.2	9.9	9.5	9.4	24.0
26.0	8.5	7.6	8.6	9.1	7.5	8.8	9.3	7.7	8.9	9.0	7.9	8.7	8.3	8.2	26.0
28.0	7.5	6.5	7.6	8.0	6.5	7.7	8.2	6.6	7.8	7.9	6.9	7.6	7.2	7.2	28.0
30.0	6.5	5.6	6.6	7.1	5.5	6.7	7.3	5.7	6.9	7.0	6.0	6.7	6.3	6.3	30.0
32.0		4.6	5.9	6.3	4.6	5.9	6.5	4.8	6.1	6.2	5.2	5.9	5.6	5.5	32.0
34.0		3.7	5.1	5.6	3.7	5.1	5.9	3.9	5.4	5.6	4.3	5.2	4.8	4.8	34.0
36.0					2.9	4.5	5.2	3.2	4.7	5.0	3.6	4.5	4.1	4.1	36.0
38.0					2.3	3.9	4.6	2.5	4.2	4.3	2.9	3.9	3.4	3.4	38.0
40.0								1.9	3.6	3.7	2.3	3.4	2.8	2.9	40.0
42.0											1.8	2.8	2.3	2.3	42.0
44.0												2.3	1.8	1.8	44.0
组合	00122	21111	11112	00222	22111	11122	01222	22211	11222	02222	22221	12222	22222	33333	组合
倍率	3	4	4	3	4	3	3	3	2	2	2	2	2	2	倍率